7.10.1.2-7 Technical data and dimensions, 045 K7

TECHNICAL DATA

Pump: The pump is of positive displacement type
Media: Fuel oil and lubricating oil
Media temperature: Max 120°C

Max feeding pressure: 0,3 MPa (3 bar)
Material pump body: Nodular cast iron
Material pump screw: Steel and cast iron
Suction head 4 m WG manometric
0 m WG manometric for 2800 rpm and 3400 rpm

Built on safety valve: Opening setting 0,6 MPa (6 bar)

Motor: Totally enclosed three phase motor for marine applications
Insulation acc. to class F
Enclosure: IP55

Dimensions in mm

Article No. Complete Set	Voltage	Hz	rpm	Motor(included) Article No.	kW	A	Weight (kg)
1764504-90	690	60	3400	565196-16	4,6	4,8	53
1764504-89	690	60	1700	551616-18	2,6	3,4	48,5
1764504-88	690	60	1100	551617-18	1,8	2,9	51
1764504-87	690	50	2800	565196-07	4,0	4,4	53
1764504-86	690	50	1400	551616-14	2,2	2,9	48,5
1764504-85	690	50	900	551617-14	1,5	2,3	51
1764504-84	575	60	1100	551617-06	1,8	3,4	51
1764504-83	480	60	3400	565196-13	4,6	7,0	53
1764504-82	480	60	1700	551616-08	2,6	5,1	48,5
1764504-81	480	60	1100	551617-08	1,8	4,3	51
1764504-80	460	60	3400	565196-12	4,6	7,3	53
1764504-79	460	60	1700	551616-07	2,6	5,1	48,5
1764504-78	460	60	1100	551617-07	1,8	4,3	51
1764504-77	440	60	3400	565196-11	4,6	7,6	53
1764504-76	440	60	1700	551616-05	2,6	5,3	48,5
1764504-75	440	60	1100	551617-05	1,8	4,5	51
1764504-74	400	50	2800	565196-02	4,0	7,5	53
1764504-73	400	50	1400	551616-10	2,2	5,0	48,5
1764504-72	400	50	900	551617-10	1,5	4,0	51
1764504-71	230	60	3400	565196-18	4,6	14,5	53
1764504-70	230	60	1700	551616-09	2,2	8,3	48,5
1764504-69	230	60	1100	551617-09	1,5	6,6	51
1764504-68	230	50	2800	565196-09	4,0	13,0	53
1764504-67	230	50	1400	551616-11	2,2	8,7	48,5
1764504-66	230	50	900	551617-11	1,5	6,9	51
1764504-65	—	—	—	Pump without motor			28

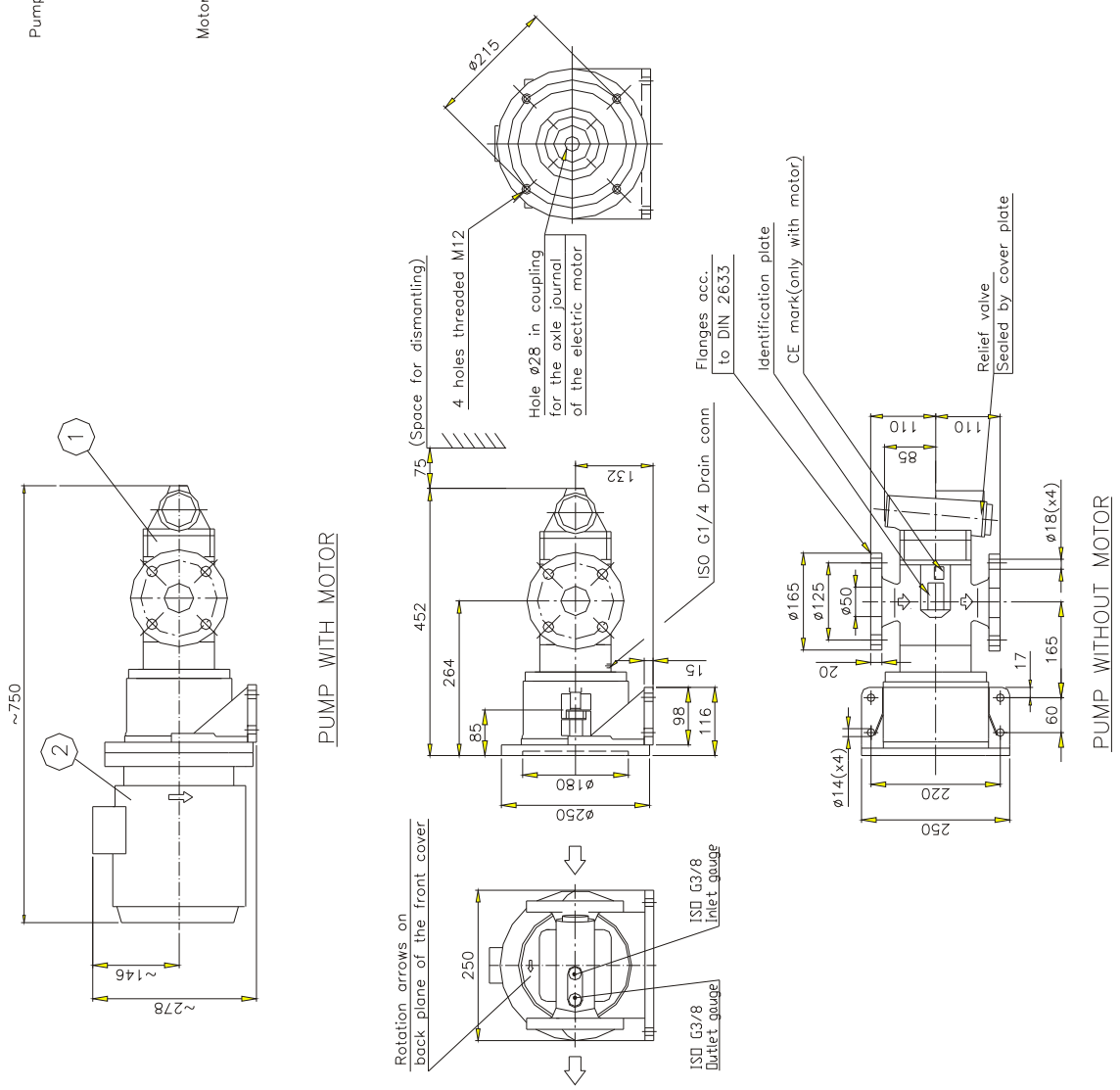

Ref. 1764504 Rev. 4

Illustrations, indications of material, dimensions and weights etc. herein, do not constitute any commitment on our part.
We reserve the right to change such specifications when necessary.