## 7.10.1.2-2 Technical data and dimensions, 025 N6

TECHNICAL DATA

Pump: The pump is of positive displacement type
Media: Fuel oil and lubricating oil
Media temperature: Max 120°C

Max feeding pressure: 0,3 MPa (3 bar)
Material pump body: Nodular cast iron
Material pump screw: Steel and cast iron
Suction head 4 m WG manometric
0 m WG manometric for 2800 rpm and 3400 rpm

Motor: 5 Built on safety valve: Opening setting 0,6 MPa (6 bar)
Totally enclosed three phase motor for marine applications
Insulation acc. to class F
Enclosure: IP55

Dimensions in mm

| Article No. Complete Set | Voltage | Hz | rpm | Pump without motor Motor(included) Article No. | kW | A | Weight (kg) |
|---|---|---|---|---|---|---|---|
| 1762162-90 | 690 | 60 | 3400 | 565347-16 | 0,9 | 1,1 | 17,5 |
| 1762162-89 | 690 | 60 | 1700 | 551586-17 | 0,5 | 0,8 | 16 |
| 1762162-88 | 690 | 60 | 1100 | 551585-18 | 0,33 | 0,7 | 16,5 |
| 1762162-87 | 690 | 50 | 2800 | 565347-07 | 0,75 | 1,0 | 17,5 |
| 1762162-86 | 690 | 50 | 1400 | 551586-11 | 0,37 | 0,7 | 16 |
| 1762162-85 | 690 | 50 | 900 | 551585-14 | 0,25 | 0,5 | 16,5 |
| 1762162-84 | 575 | 60 | 1700 | 551586-06 | 0,50 | 0,92 | 16 |
| 1762162-83 | 480 | 60 | 3400 | 565347-13 | 0,9 | 1,6 | 17,5 |
| 1762162-82 | 480 | 60 | 1700 | 551586-15 | 0,5 | 1,1 | 16 |
| 1762162-81 | 480 | 60 | 1100 | 551585-08 | 0,33 | 0,90 | 16,5 |
| 1762162-80 | 460 | 60 | 3400 | 565347-12 | 0,9 | 1,7 | 17,5 |
| 1762162-79 | 460 | 60 | 1700 | 551586-14 | 0,5 | 1,1 | 16 |
| 1762162-78 | 460 | 60 | 1100 | 551585-07 | 0,33 | 0,95 | 16,5 |
| 1762162-77 | 440 | 60 | 3400 | 565347-11 | 0,90 | 1,8 | 17,5 |
| 1762162-76 | 440 | 60 | 1700 | 551586-05 | 0,50 | 1,2 | 16 |
| 1762162-75 | 440 | 60 | 1100 | 551585-05 | 0,33 | 1,0 | 16,5 |
| 1762162-74 | 400 | 50 | 2800 | 565347-02 | 0,75 | 1,7 | 17,5 |
| 1762162-73 | 400 | 50 | 1400 | 551586-07 | 0,37 | 1,1 | 16 |
| 1762162-72 | 400 | 50 | 900 | 551585-10 | 0,25 | 0,9 | 16,5 |
| 1762162-71 | 230 | 60 | 3400 | 565347-18 | 0,9 | 3,4 | 17,5 |
| 1762162-70 | 230 | 60 | 1700 | 551586-18 | 0,5 | 2,3 | 16 |
| 1762162-69 | 230 | 60 | 1100 | 551585-09 | 0,25 | 1,4 | 16,5 |
| 1762162-68 | 230 | 50 | 2800 | 565347-09 | 0,75 | 3,0 | 17,5 |
| 1762162-67 | 230 | 50 | 1400 | 551586-12 | 0,37 | 2,0 | 16 |
| 1762162-66 | 230 | 50 | 900 | 551585-11 | 0,25 | 1,6 | 16,5 |
| 1762162-65 | — | — | — | | | | 10 |

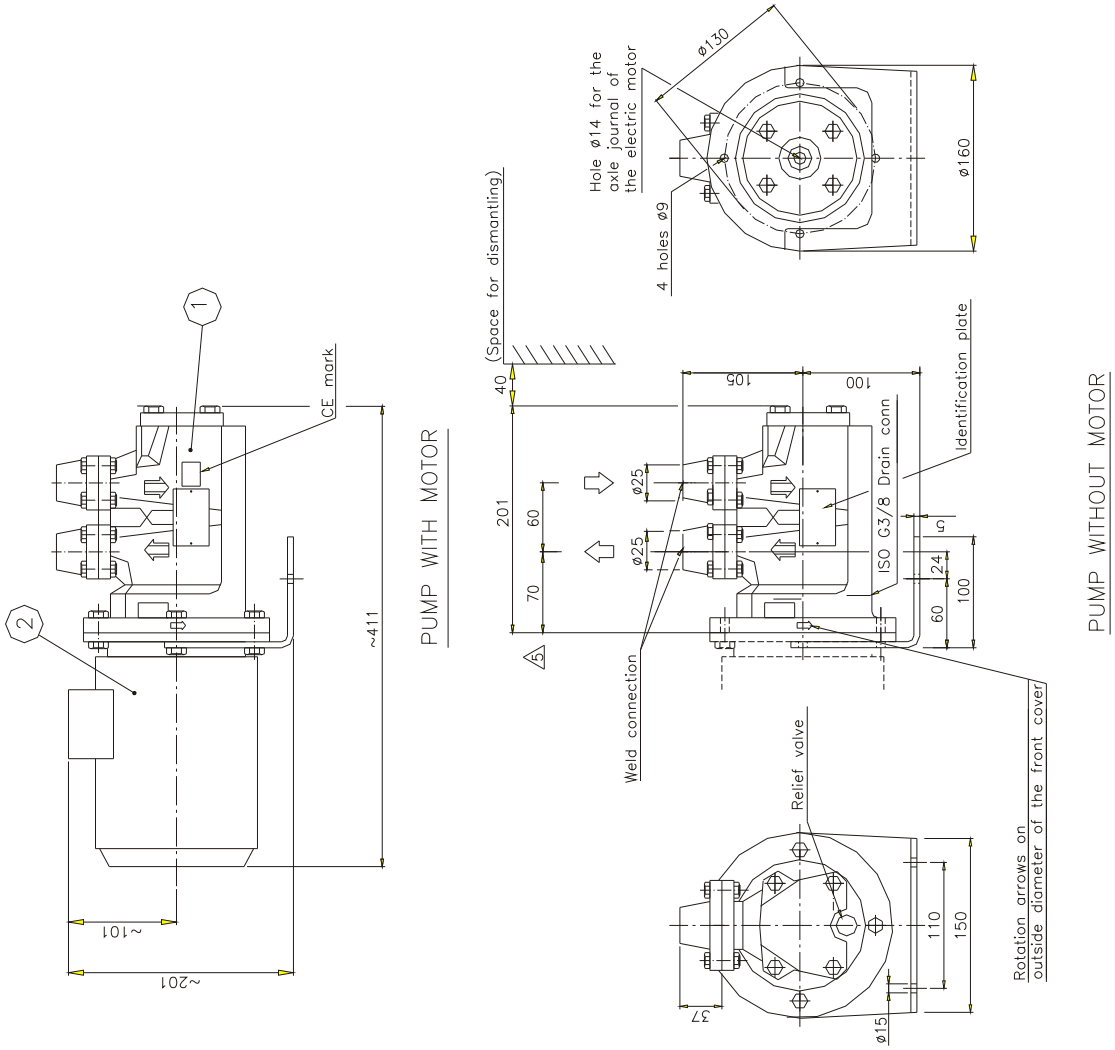


Ref. 1762162 Rev. 5


Illustrations, indications of material, dimensions and weights etc. herein, do not constitute any commitment on our part.
We reserve the right to change such specifications when necessary.